Think safety think Steelmate

Steelmate Automotive UK Ltd
Unit D1 Ivinghoe Business Centre
Blackburn Road
Houghton Regis
Bedfordshire
LU5 5BQ

T: 01582 475677 F: 01582 476497
W: www.steel-mate.co.uk
E: enquiry@steel-mate.co.uk

xxxxxxxx

STEELMATE AUTOMOTIVE

PTS800EX

Parking assist system

Front & Rear Protection

Installation And User Manual

Contents

User's Manual

Installation Manual

User's Manual

Important notice

Parking assist systems help to provide assistance when reversing and parking. Driving skills, such as slowing down, use of mirrors etc. are always essential.

1.This unit is for vehicles with 12V DC only.

2.Unit should be installed by a professional auto technician.

3.Route wiring harness away from heat sources and electrical components.

4.It is strongly recommended to check the position of the sensors before the actual drilling of the holes.

5.Perform test after installation.

Disclaimer

The parking assist system is designed as a driver assistance device, and should not be used as a substitute for safe parking practices. The area into which the vehicle is driving or to be reversed must be constantly visually monitored while parking.

The manufacturer and its distributors do not guarantee or assume liability for collisions or damages while parking your vehicle.

About the product

The PTS800EX is an 8 sensor front & rear parking assist system that is an ultrasonic distance monitoring device. It electronically detects the area in front and behind your vehicle while driving/parking, and alerts you with audible tones and/or optional visual display, if the system detects an obstacle. If you have one of the optional displays fitted with the digital numbers the system will accurately show the distance to the obstacle. With features like self-test and the learning function the PTS800EX is ideal for cars with tow bars, spare wheels or other protrusions. The various optional displays available are suitable for dash, interior mirror or rear roof mounting. When the display is mounted on the rear roof it can be easily viewed from the interior mirror.

Key features

- 8-sensor system, complete front and rear protection
- 2 control units designed for luxury vehicles
- Dual intelligent function together with learning function for vehicle with tow-bar, spare wheel or other protrusions.
- Anti-false alert technology
- Can be used as 6-sensor system
- Buzzer can be upgraded to LED/LCD displays
- Detachable sensors with waterproof cable connectors
- Self-test function
- All weather design

Specifications

Operating voltage:	9~16V DC
Operating current:	<250mA
Detection range	
Front system:	0.3~0.9m/1.0~3.0ft
Rear system:	0.3~2.5m/1.0~8.2ft
Buzzer SPL	Low frequency: 80±10dB High frequency: 90±10dB
ECU:	
Operating temp:	-40°C~+80°C/-40°F~+176°F
Storage temp:	-40°C~+85°C/-40°F~+185°F
LCD:	
Operating temp:	-20°C~+70°C/-4°F~+158°F
Storage temp:	-30°C~+80°C/-22°F~+176°F
LED:	
Operating temp:	-40°C~+80°C/-40°F~+176°F
Storage temp:	-40°C~+85°C/-40°F~+185°F
Buzzer:	
Operating temp:	-40°C~+80°C/-40°F~+176°F
Storage temp:	-40°C~+85°C/-40°F~+185°F

6 / 8-sensor automatic recognition

This system can be used as a 6 or 8 sensor system. This can be achieved by connecting the 2 middle sensors (F&G) or 2 outer sensors (E&H) at the front ECU.

Note:

The warning distance for E & H sensor is < 0.7m /2.3ft.

The warning distance for F & G sensor is < 0.9m /3.0ft.

Buzzer & Display (optional)

The alert buzzer can be upgraded to a display. These pictures are for reference only, the actual display may vary.

Only some LED displays have a set button or digital indication. Digital indicator and adjustable volume function depend on the display you choose.

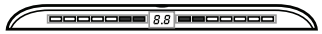

LED display (optional)

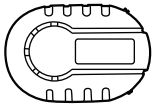

Buzzer

Buzzer volume and frequency adjustment

Volume adjustment

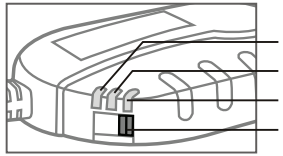

Frequency adjustment

The buzzer sound frequency can be changed making it easier to distinguish the warning between a front or rear system.

E.g. low frequency for rear kit and high frequency for front kit.

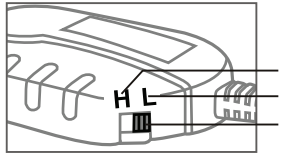

Self-test function

Front system

When the vehicles ignition is on the system will test all sensors automatically.
If all the sensors are working the system will work as normal.
If a damaged or defective sensor is detected the system will beep 3 times.

For buzzer

All sensors are working property

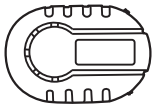

Damaged or defective sensor is detected.

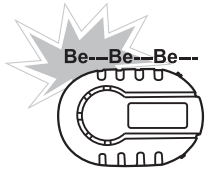

For display

All sensors are working property

Damaged or defective sensor is detected.

Notes:

- Beep 3 times for alarm
- Other sensors will keep working after the alarm
- No. of sensor damaged/defective (E1~E4) will be shown on the display together with the corresponding LED lights on for showing which sensor(s) is(are) damaged/defective.
- For E2: The system will not alarm when sensors (F&G) are damaged/defective as it will work as 2-sensor system automatically.

Rear system

When reverse gear is selected, the system will test all rear sensors automatically.
If all sensors are working properly, the buzzer/display will beep once.
If a damaged or defective sensor is detected, then the system will beep 3 times.

For buzzer

All sensors are working properly

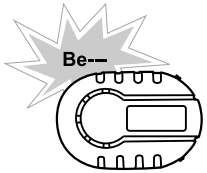

Damaged or defective sensor is detected.

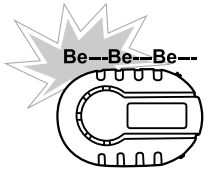

For display

All sensors are working properly

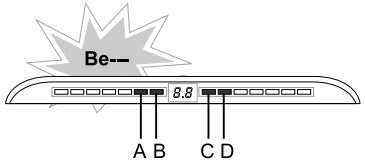

Damaged or defective sensor is detected.

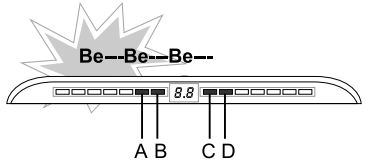

Note:

- Beep 3 times for alarm
- Other sensors will keep working after the alarm
- No.of sensors damaged/defective (E1~E4) will be shown on the display together with the corresponding LED lights on for showing which sensor(s) is(are) damaged/defective.
- For E2: The system will not alarm when sensors (B&C) are damaged/defective as it will work as a 2-sensor system automatically.

Front ECU Functions

System On Time

The system is activated by pressing the footbrake. When you press the footbrake and release it, the system will continue to work for some time.

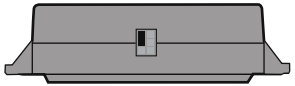

Jumper position: "5 seconds" (Default setting)
The system continues to work for 5 seconds
Recommendation: For Automatic

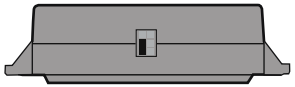

Jumper position: "20 seconds"
The system continues to work for 20 seconds
Recommendation: For Manual Cars

Sensor installation height

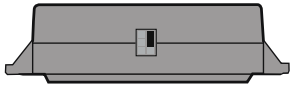

Jumper position: "54cm~65cm"
Recommended setting for sensor installation heights between 54cm~65cm from the ground.

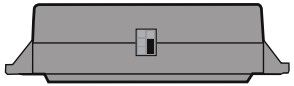

Jumper position: "45cm~54cm" (Default setting)
Recommended setting for sensor installation heights between 45cm~54cm from the ground.

Rear ECU Functions

Sensor installation height

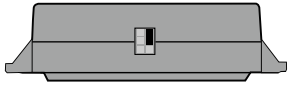

Jumper position: "54cm~65cm"
Recommended setting for sensor installation heights between 54cm~65cm from the ground.

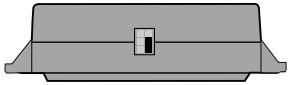

Jumper position: "45cm~54cm" (Default setting)
Recommended setting for sensor installation heights between 45cm~54cm from the ground.

Dual intelligent function for spare wheel

When using this function the detected distance will increase by 20cm between the sensor head and the obstacle, this function is ideal for vehicles with a tow-bar or spare wheel on the back.

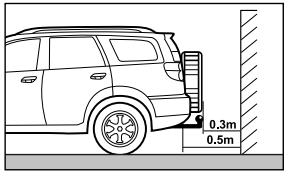

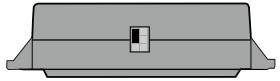

Jumper position: "0"
(Default setting)
Normal detected distance

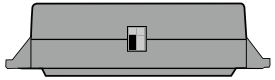

Jumper position: "20"
The detected distance between the sensor head and the obstacle will be increased by 20cm

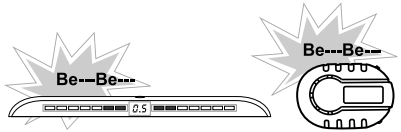

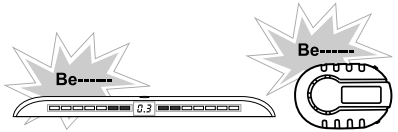

Learning function for cars with tow-bars or spare wheels

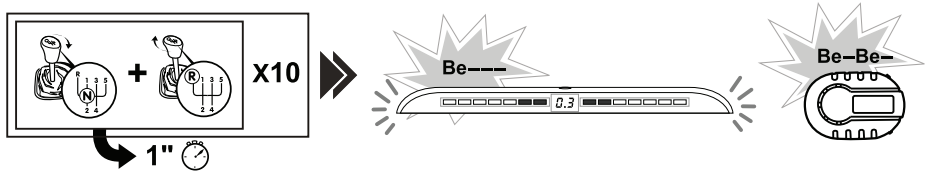

With the ignition on change gear from "N" to "R" 10 times (Each gear change must be within 1 second) At the 10th time leave the vehicle in the "R" position for 6 seconds to complete the learning process.

Clearing the learning function:

With the ignition on change gear from "N" to "R" 12 times (Each gear change must be within 1 second) At the 12th time leave the vehicle in the "R" position for 8 seconds to clear the learning function and reset the system.

Note: If you make a mistake while carrying out the above procedure leave vehicle in the "R" position for 2 seconds to clear the system memory and then start the procedure again.

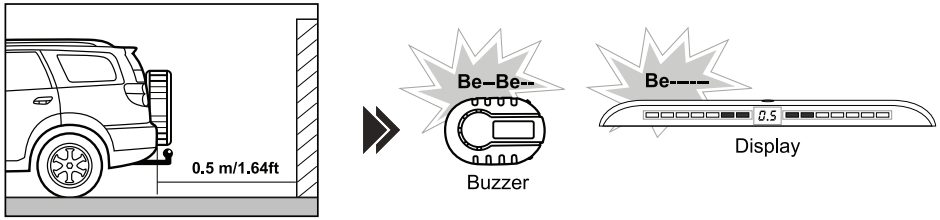

Function test after learning function is set.

How does the system work

Driving forward (6 sensors)

No beep
Distance: 1.3m/4.3ft

Be ---- Be ----
Distance: 0.5m/1.6ft

Be -------
Distance: (<0.30m/1.0ft)

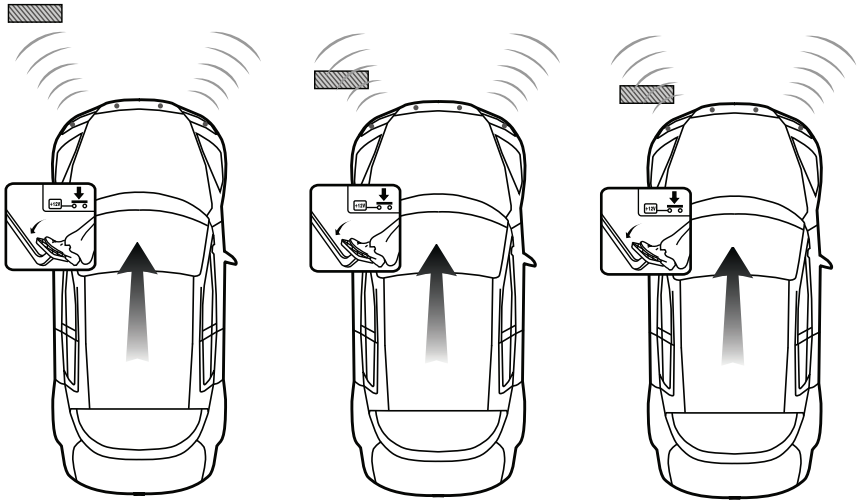

Driving forward (8 sensors)

No beep
Distance: 1.2m/3.9ft

Be --- Be ---
Distance: 0.6m/2.0ft

Be -------
Distance: <0.3m/1.0ft

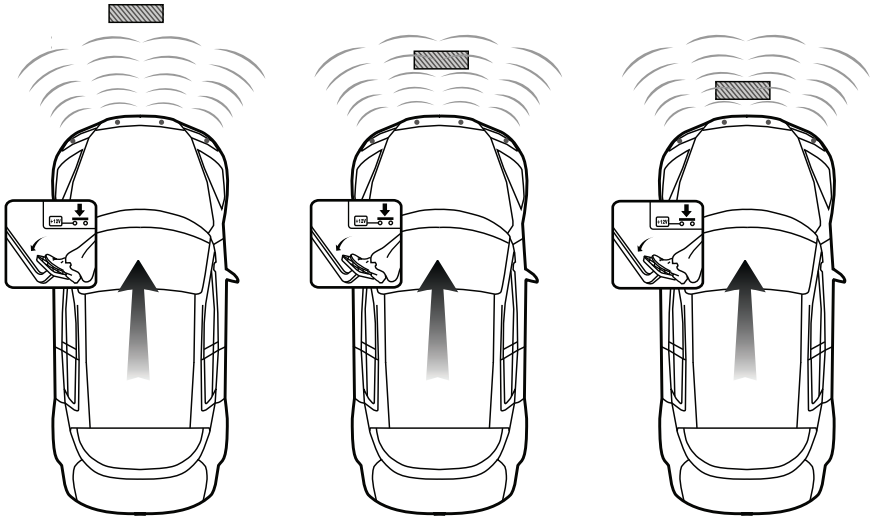

The front system will continue to work for 5 seconds after the footbrake is released.

Reversing

Be ------
Distance: <0.3m/1.0ft

Be--Be--Be–
Distance: 0.5m/1.6ft

No beep
Distance: 1.1m/3.6ft

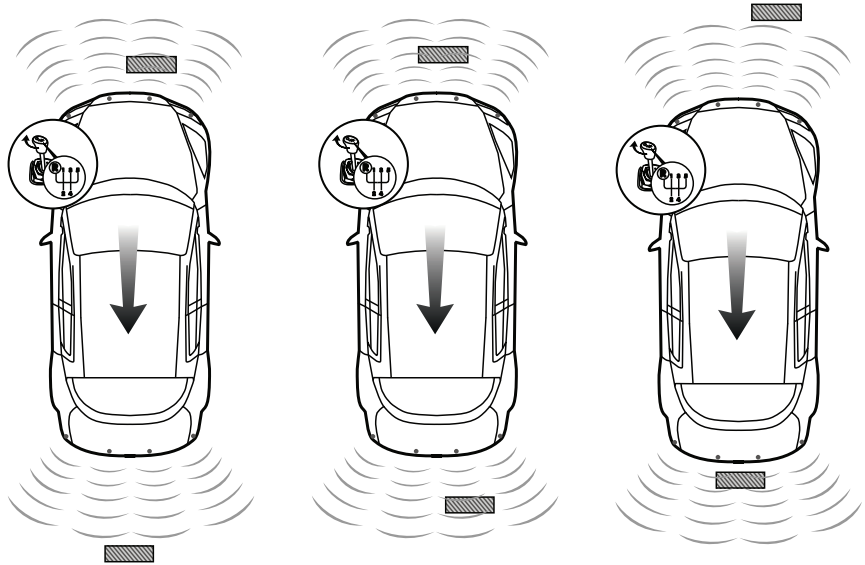

No beep
Distance: >1.5m/4.9ft

Be--Be--Be–Be–
Distance: 0.8m/2.6ft

Be -------
Distance: < 0.3m/1.0ft

Zigzag reversing

Be--Be--Be--
Distance: 0.4m/1.3ft

Be ---- Be ----
Distance: 0.6m/2.0ft

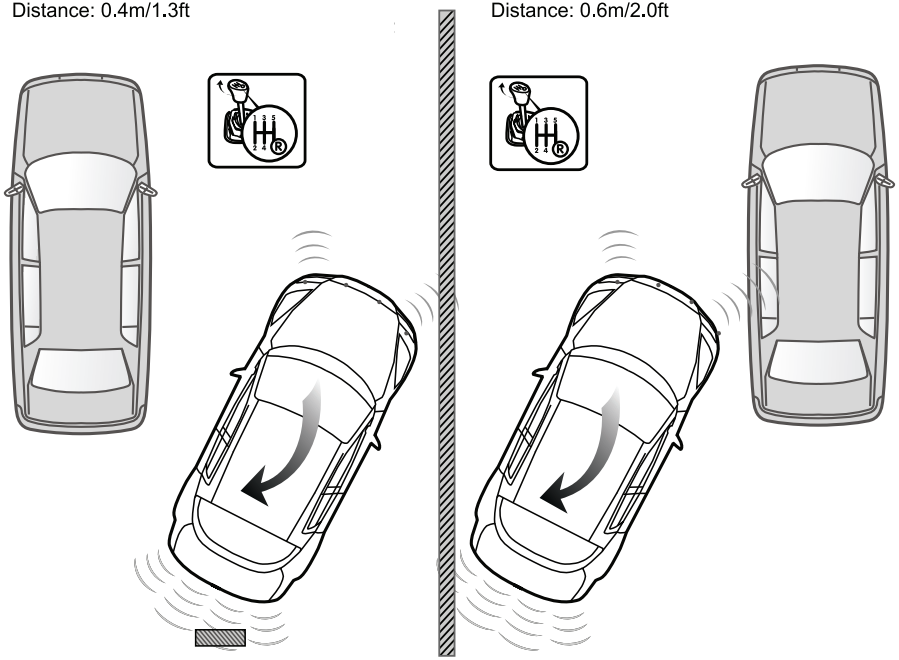

Be--Be--Be--
Distance: 0.6m/2.0ft

Be ------
Distance: 0.3m/1.0ft

Attention

False detection may occur in the following situations:

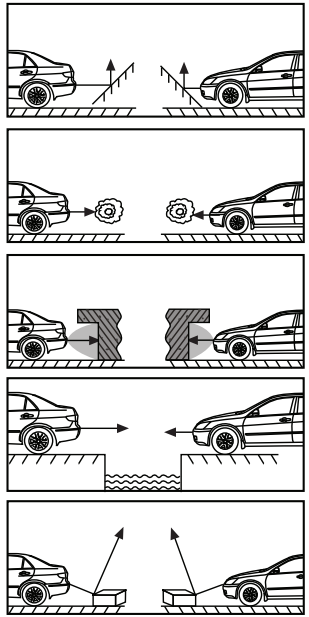

- After installation, please fully test the system before use.
- Heavy rain, dirty or damaged sensors may cause a false alarm occasionally.
- Ensure that the self-test procedure is complete and all sensors are functioning before reversing.

Sensor maintenance

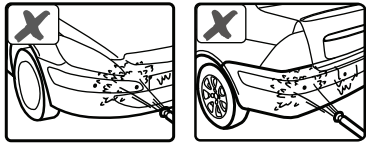

Do not wash the sensor with a pressure washer or scrub them forcibly.

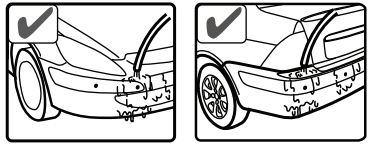

Please wash car with low-pressure water.

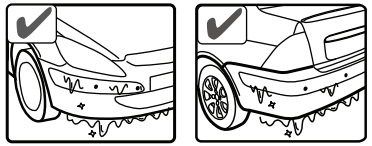

Please melt the ice with water when the sensors are covered by ice.

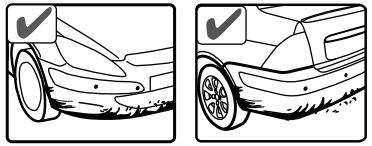

Please clean the sensors with a cloth or low-pressure water when the sensors are covered by mud or snow.

Installation Manual

Brief installation diagram

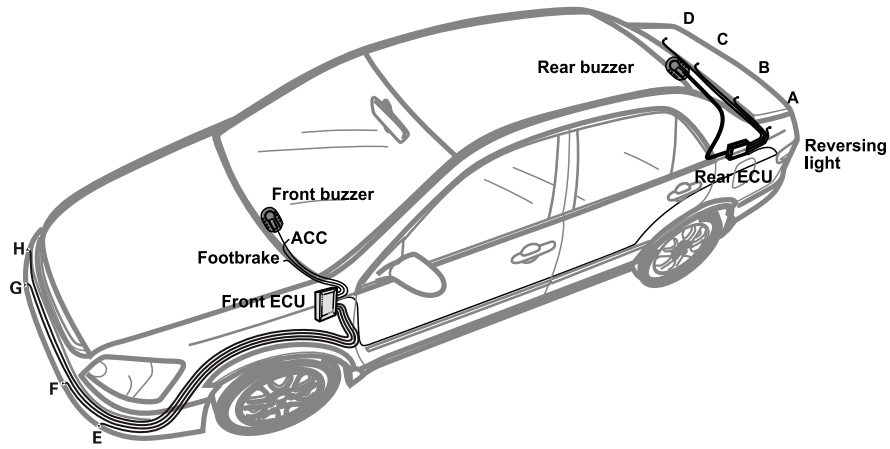

Packing list

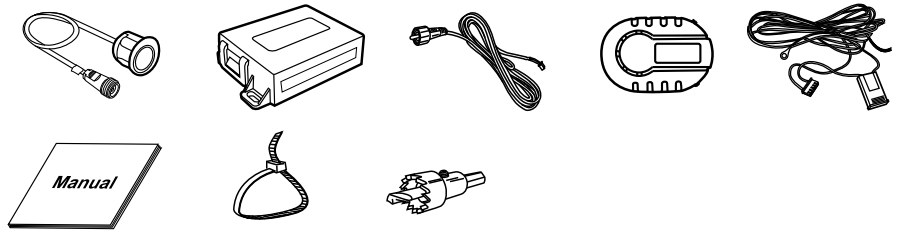

※ The above graphics are for reference only.

Installation tools

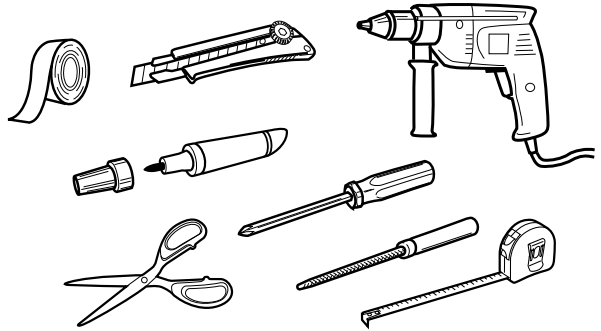

60' ~ 80'

Sensor installation

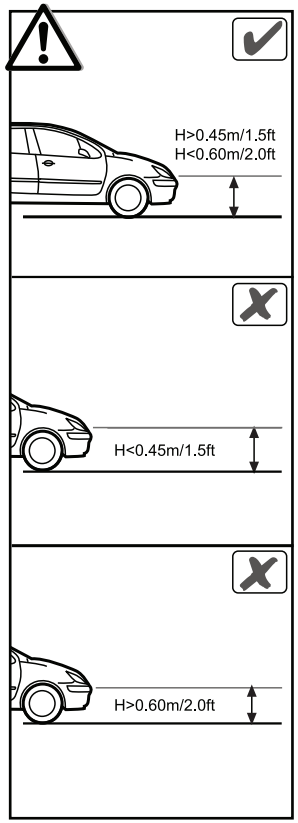

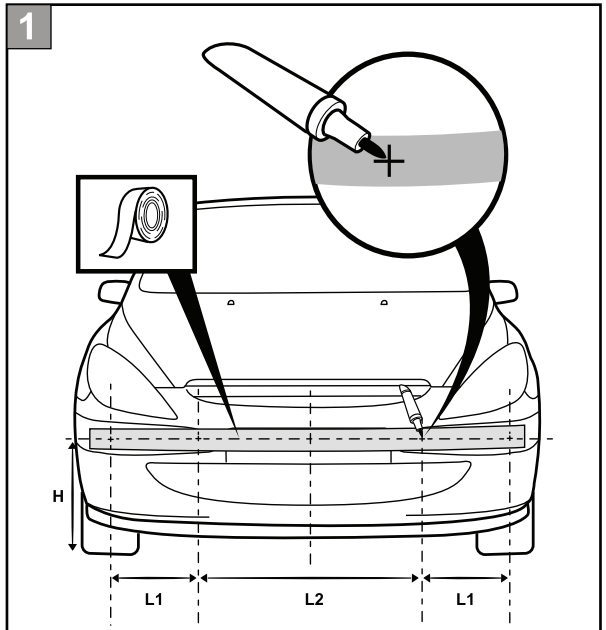

Suggested sensor spacing is 45cm apart. On some vehicles this is unachievable due to the number plates location or bumper design. This will mean the distance between the centre two sensors will be greater (see illustration L2) the kit will still function, however the systems detection of narrow objects i.e. posts will be reduced.

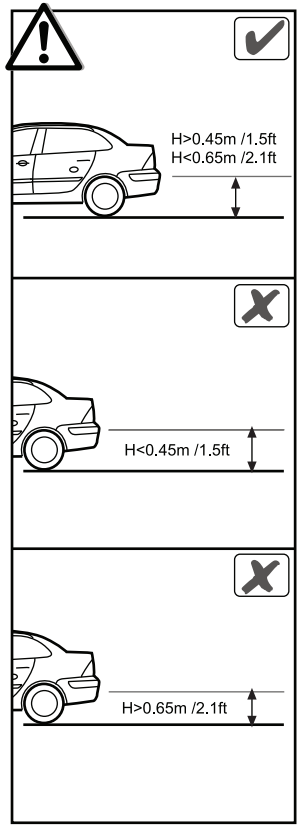

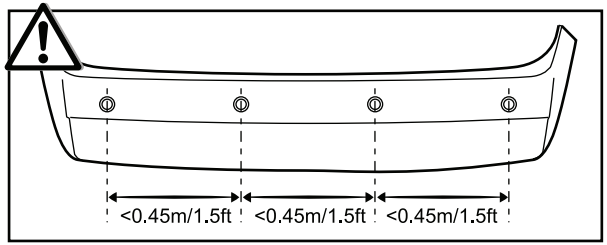

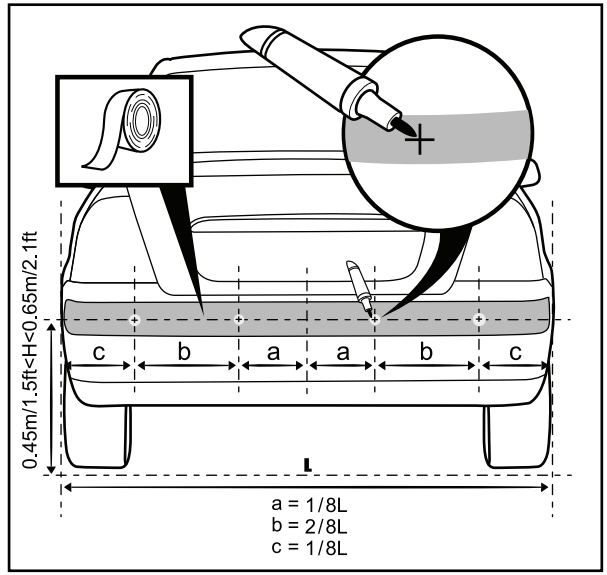

2

Changing the sensor head angle.

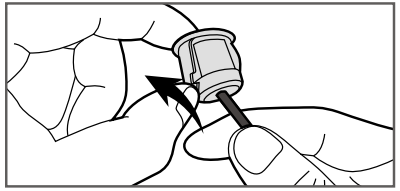

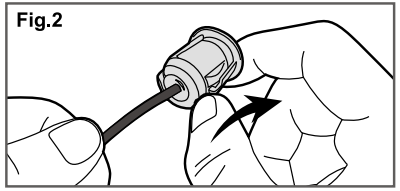

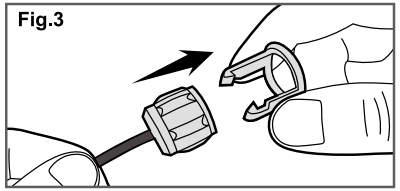

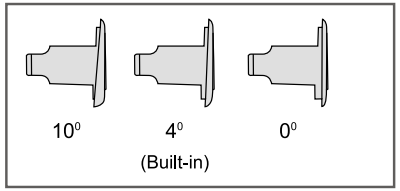

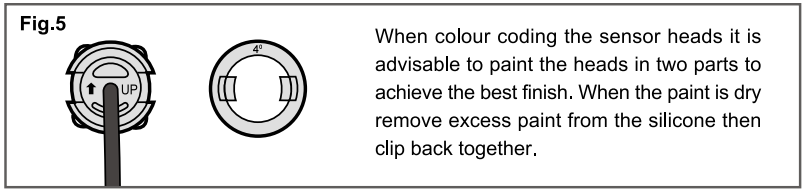

When colour coding the sensor heads it is advisable to paint the heads in two parts to achieve the best finish. When the paint is dry remove excess paint from the silicone then clip back together.

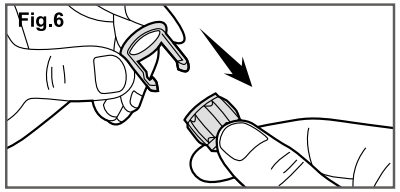

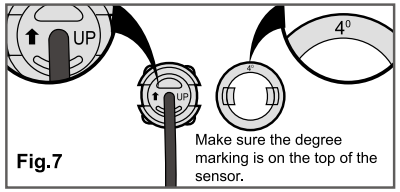

NOTE: *For sensor colour coding procedure please refer to* ***Fig.5***

3

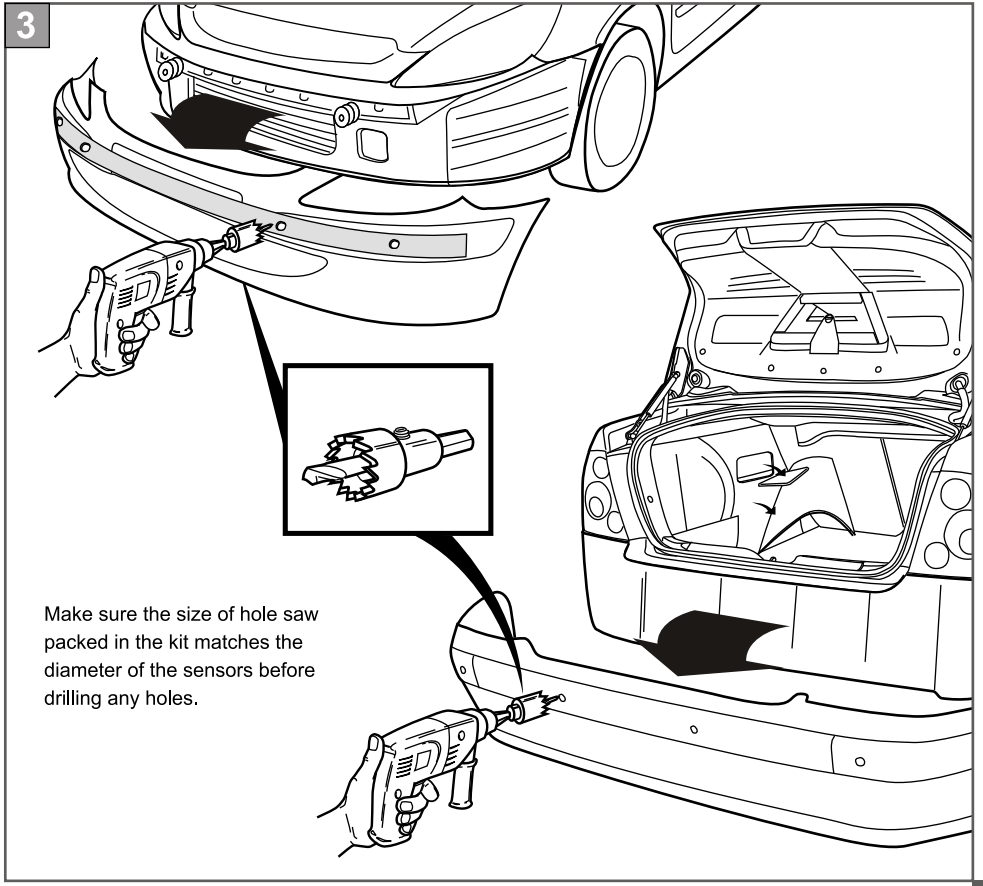

Make sure the size of hole saw packed in the kit matches the diameter of the sensors before drilling any holes.

4

If a gap is found between the bumper and the sensor head when using the 10 degree clip on head, adjust the angle of the hole as shown below.

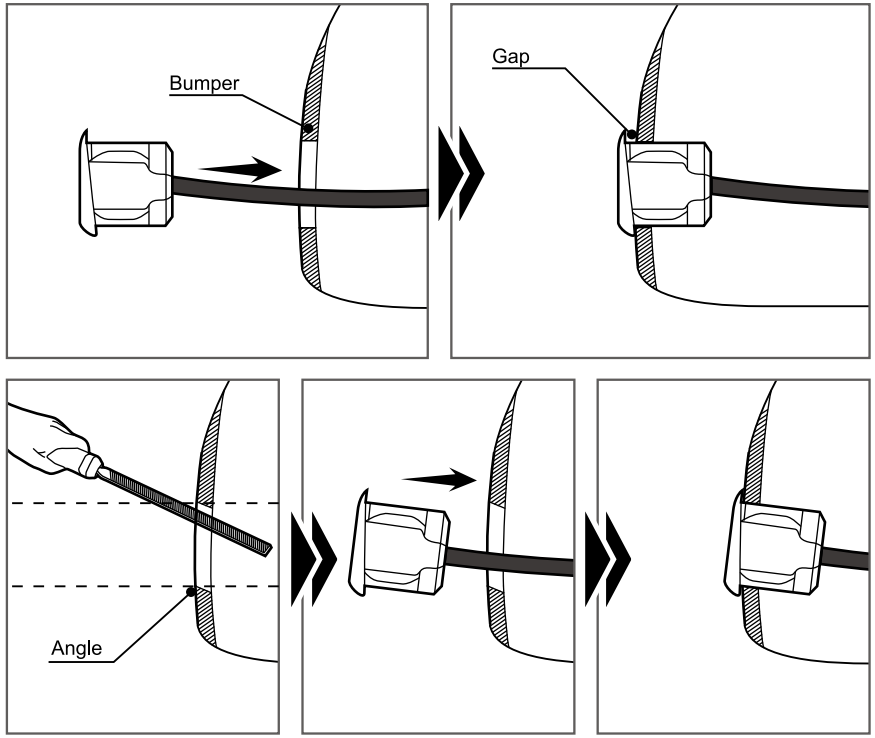

5

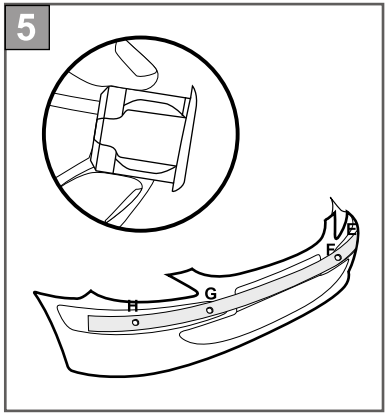

6

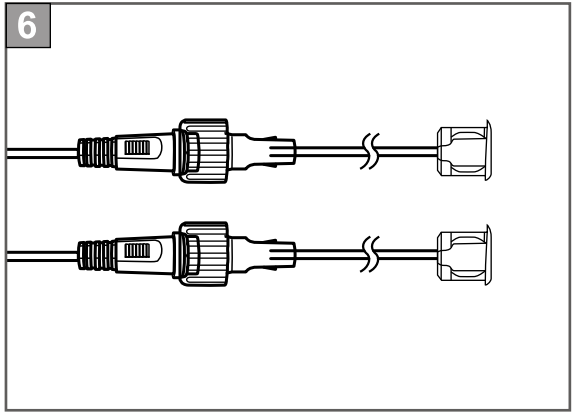

7

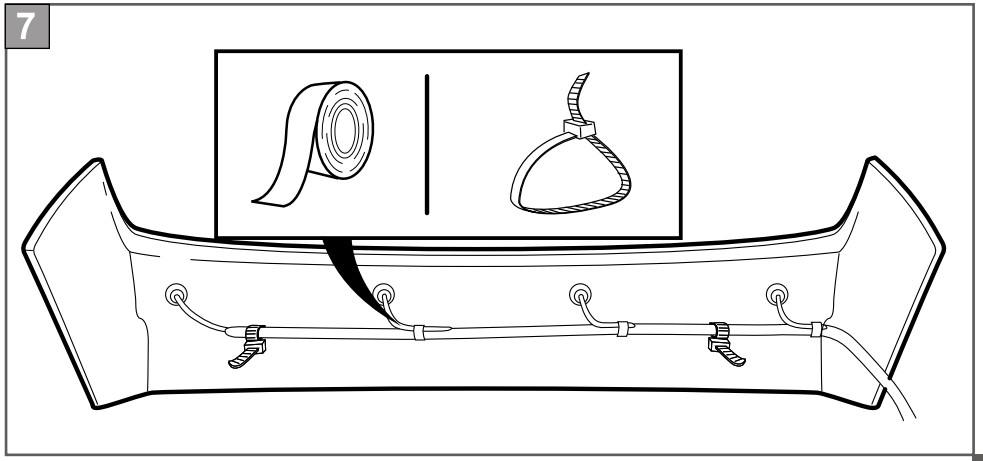

8

H
G
F
E
D
C
B
A

Buzzer installation

Front buzzer installation
A

Rear buzzer installation
B

The above are the recommended buzzer installation locations.

Wiring diagram (Front ECU)

4-sensor system

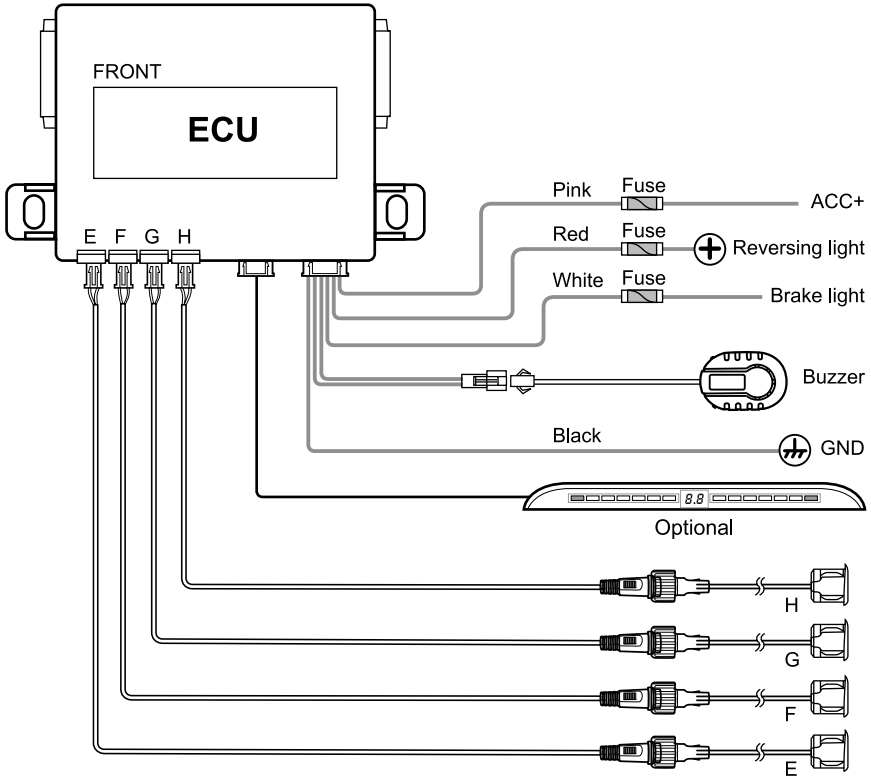

Note: 4 sensors display range: 0.3m ~ 0.9m/1.0ft ~ 3.0ft

2-sensor system

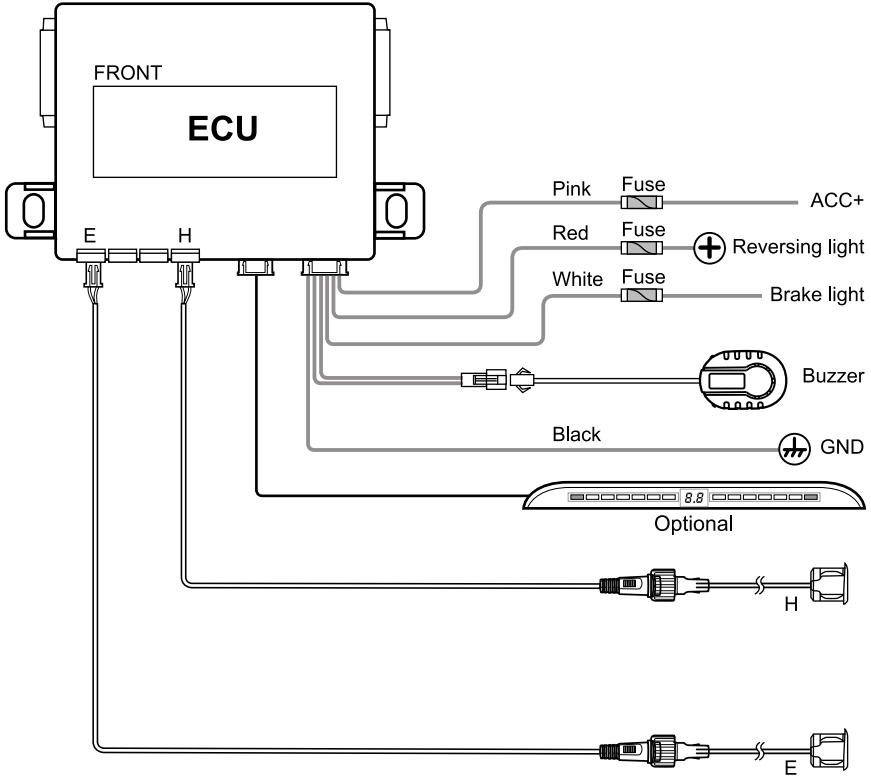

Note: E&H sensors display range: 0.3m ~ 0.7m/1.0ft ~ 2.3ft

2-sensor system

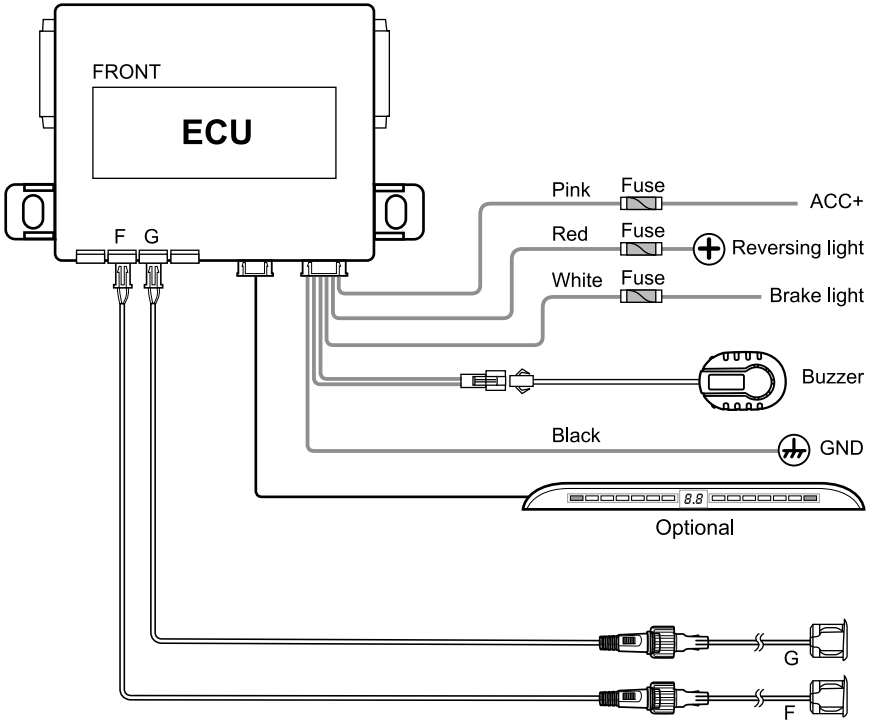

Note: G&F sensors display range: 0.3m ~ 0.9m/1.0ft ~ 3.0ft

Wiring diagram (Rear ECU) 1

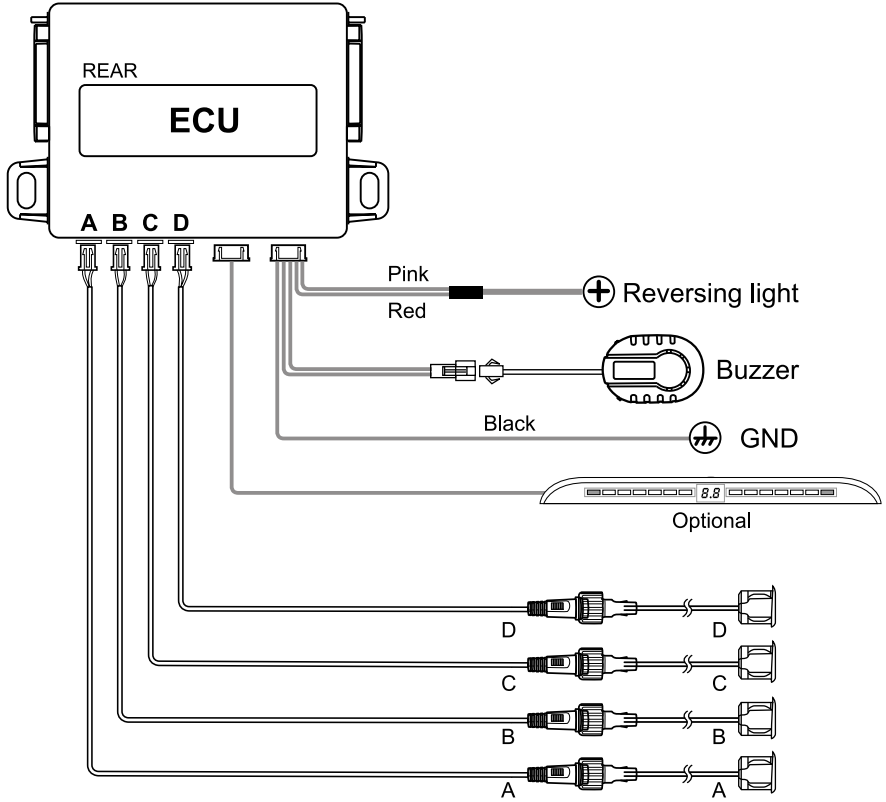

Wiring diagram (Rear ECU) 2

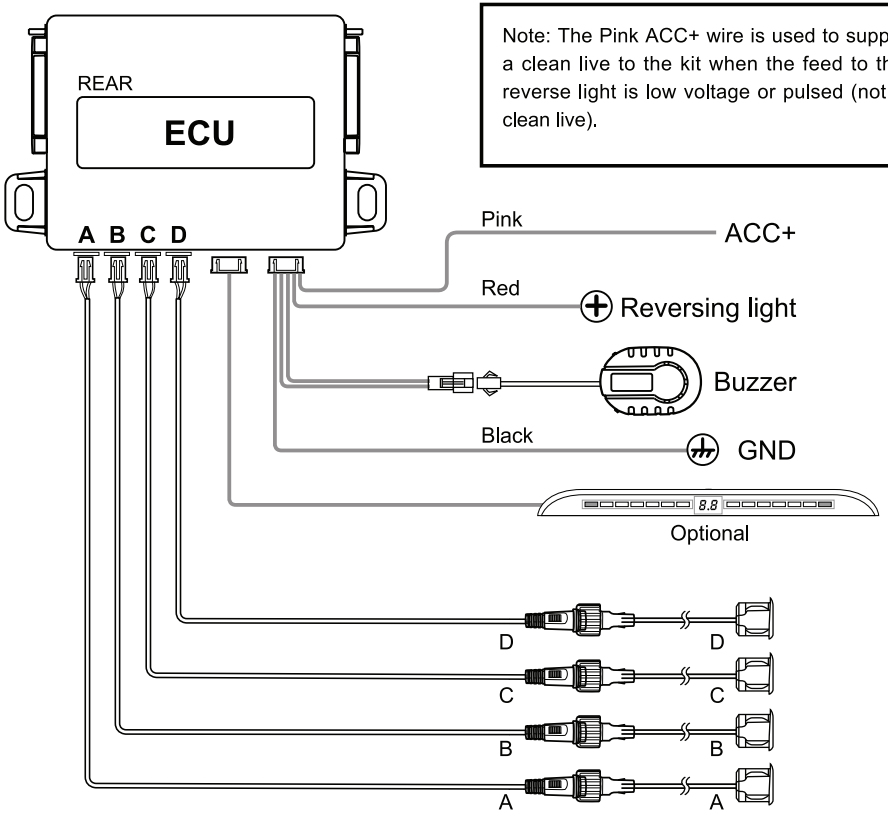

Note: The Pink ACC+ wire is used to supply a clean live to the kit when the feed to the reverse light is low voltage or pulsed (not a clean live).

Function test after installation

Complete the function test by placing a wooden board (0.3x1.0m/1.0x3.3ft) standing at the front or rear of the car, and drive the car forward and backwards to test each function respectively as shown in this manual.

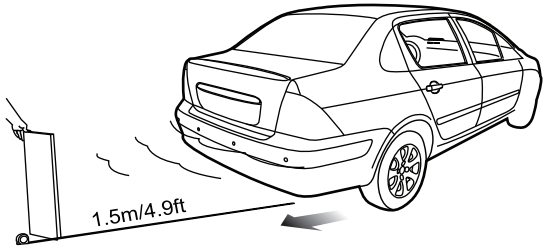

Rear sensor function test

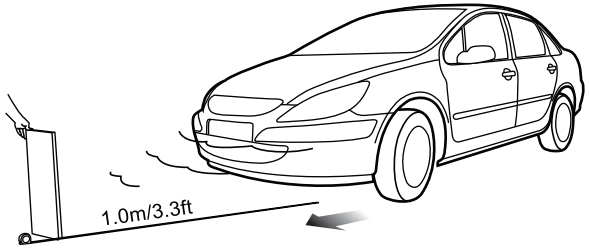

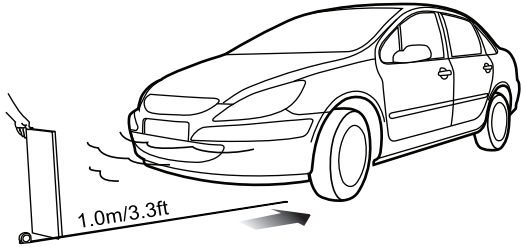

Front sensor function test

Troubleshooting

After installation, the buzzer doesn't work
a) Are all wires connected properly?
b) Is the vehicle's ignition ON?

Damaged sensor detected
a) Are all sensors plugged into the ECU correctly and tightly?
b) Is the sensor wire broken?
c) Is the sensor covered by mud or snow?
d) Is the sensor damaged?

False warning
a) Are all sensors plugged into the ECU in the correct position tightly?
b) Does any sensor detect the ground?

If the problem persists, please follow these steps
a) For consumer contact your dealer or nearby service centre.
b) For installer or dealer
- Test the sensors with certified ECU by using a flat wooden board.
- Replace the ECU and recheck the system.
- Plug the certified sensors into the ECU and recheck.
- Email your question to us and we will reply ASAP.

Warranty card

Dear user:
Thank you for choosing this product. Please fill in the form below and retain it.

User's information:

User:
Tel:
Vehicle:
Product model No:
Serial No.:
Date of installation:
Name of the retailer:

Warranty information

Dear Customer:
Thank you for choosing a Steelmate product. This product comes with our standard 12 month warranty. To receive our additional limited product lifetime warranty** for this product you must complete the warranty registration form that can be found at the web address below:

www.steel-mate.co.uk

Our standard 12 month warranty and our limited product lifetime warranty** only covers parts. Steelmate are not liable and will not pay any labour costs incurred during the removal and or re-installation of warranted equipment or parts. The limited product lifetime warranty** applies only to the original end user/customer of the product for so long as the original end user/customer owns the product. This limited warranty is not-transferable. When registering for the additional warranty online it is not essential to supply the product serial number, however when making a claim the product serial number shown on the ECU must be on all claim correspondence. All warranty claims should be processed as per the instructions on our website under the warranty section and proof of purchase must be provided for both our 12 month and our limited product lifetime warranties**.

Our warranty department is open from 09:00-17:30 Mon-Fri and can be contacted by telephone on 01582 475677 or by email (warranty@steel-mate.co.uk) should you require any further assistance.

**Steelmate limited product lifetime warranty is for the product lifetime which is limited to 5 years.